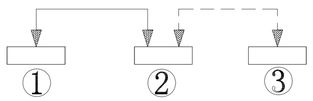

CIRCUIT DIAGRAM

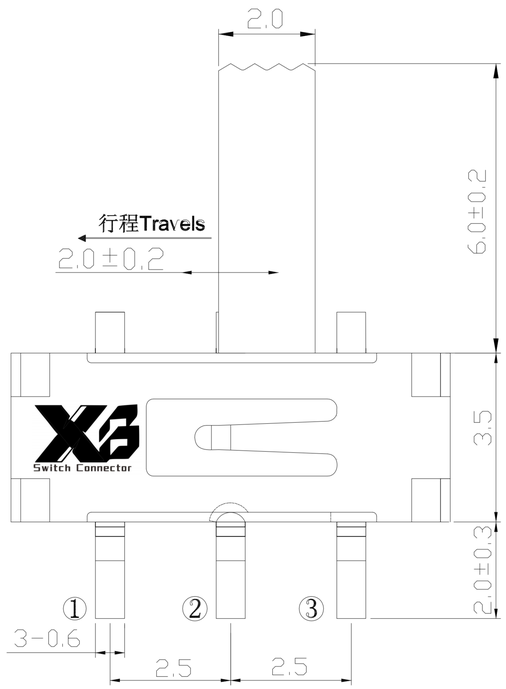

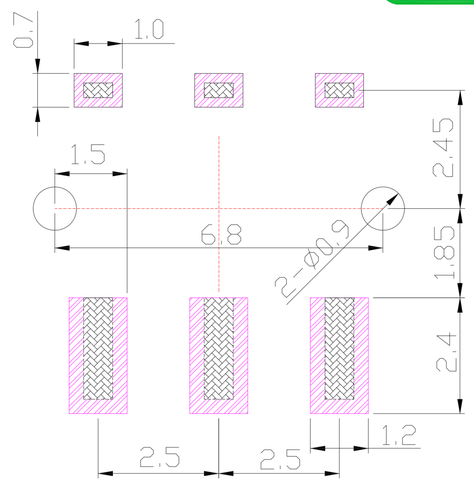

P.C.B LAND PATTERN

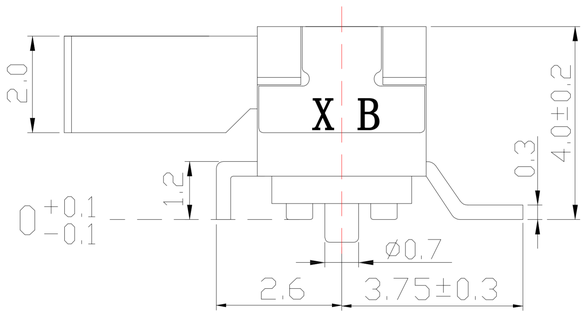

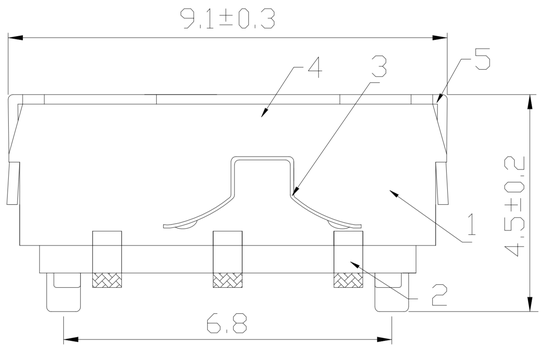

SPECIFICATIONS

Rating	100mA , 12V DC
Insulation Resistance	100MΩ Min.
Dielectric Withstanding Voltage	AC 250 V(50Hz)1min
Contact Resistance	100mΩ Max.
Operating Force	200 ± 70gf
Operating Life	10,000 cycles

NO.	DESCRIPTION	QTY	MATERIAL	PLATING
E	TERMINAL	3	PHOSPHOR BRONZE	Ag plated
D	CLIP	2	PHOSPHOR BRONZE	Ag plated
C	COVER	1	SUS	
B	BASE	1	PA	Black
A	SLIDER	1	PA	Black

ITEM NO.	DESCRIPTION	DRAWN	DATE

东莞市溪榜电子有限公司
DONG GUAN XI BANG ELECTRONI CS CO., LTD.
Switch Connector

TOLERANCE UNLESS OTHERWISE STATED :
Up to 5 ±0.2
Above 5 ~ 15 ±0.3
Above 15 ~ 30 ±0.4
Above 30 ~ 50 ±0.5
Angle ±0.3°

3RD. ANGEL'S

UNITS MM

DRAWN BY: Jack Lu	DATE 09/09/21	MAT'L	
CHECKED BY: Jacky Chen	DATE 09/09/21	FINISH	
APPROVED BY: Tony Kao	DATE 09/09/21	SCALE	1 : 1
		SHEET NO.	1 of 1

TITLE	SWITCH
MODLE	SLIDE SWICTH
DWG NO.	SS-B81C-B-S246
PART NO.	SS-B81C-B-S246

SIZE A4
VER R