1.25mm Pitch Miniature Crimping Connector (UL Listed)

DF13 Series

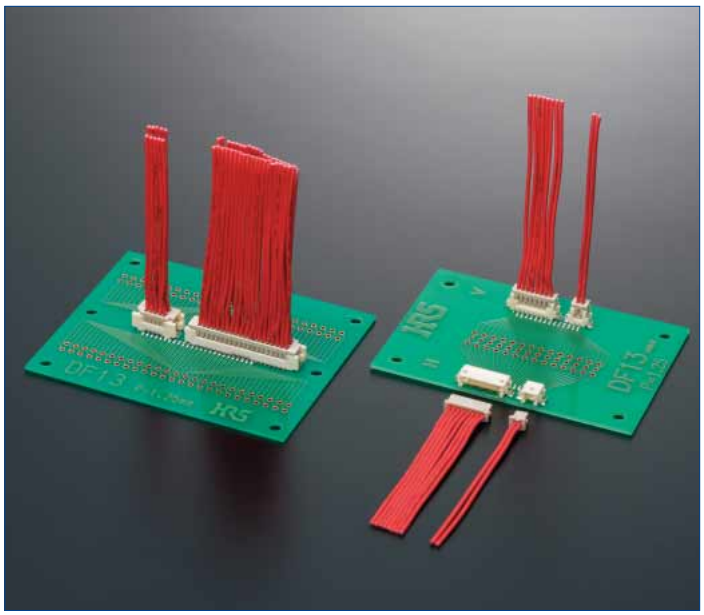

Type		Mounting Type	Mounting Height(h)
Straight Type	DIP	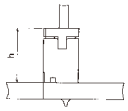	5.3mm
	SMT	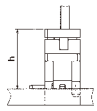	5.8mm
Right Angle Type	DIP	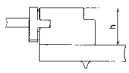	3.6mm
	SMT	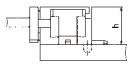	

■Features

1. Miniature Size

Designed in the low profile at mounting height 5.8mm. (SMT mounting straight type)
(For DIP type, the mounting height is to 5.3mm to the straight and 3.6mm at the right angle)

2. Multi-contact

The double row type achieves the multi-contact up to 40 contacts, and secures 30% higher density in the mounting area, compared with the single row type.

3. Correspond to Automatic Mounting

The header provides the grade with the vacuum absorption area, and secures automatic mounting by the embossed tape packaging.
In addition, the tube packaging can be selected. (Fig.1)

4. Integral Basic Function Despite Miniature Size

The header is designed in a scoop-proof box structure, and completely prevents mis-insertion.
In addition, the surface mounting (SMT) header is equipped with the metal fitting to prevent solder peeling. (Fig.1)

5. UL Certifled

Correspond to Automatic Mounting
Secure the automatic plain area for the absorption type automatic mounting machine.

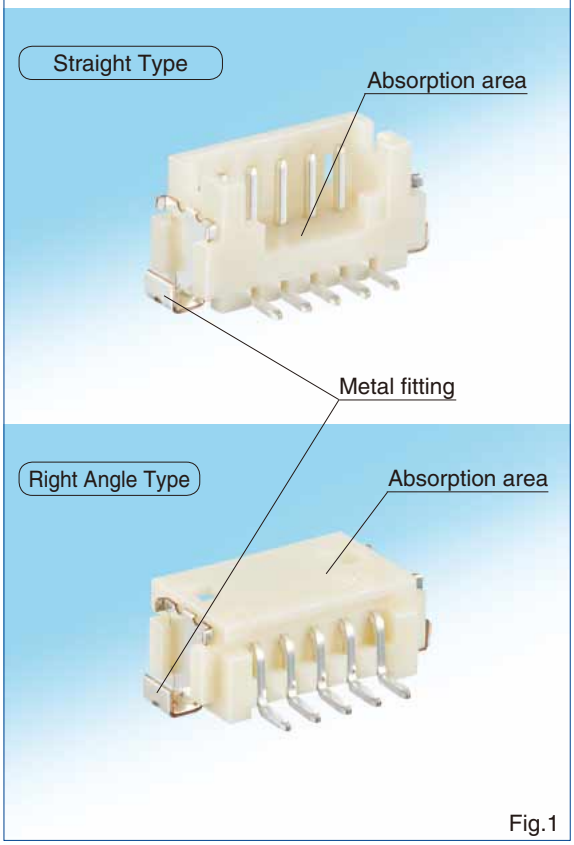

Fig.1

■Applications

Note PC, mobile terminal, miniature type business equipment, and other various consumer equipment, including video camera

Aug.1.2026 Copyright 2026 HIROSE ELECTRIC CO., LTD. All Rights Reserved.

■Product Specifications

Rating	Rated Current	Specification	2pos. 26 AWG : 2.5A/pin 28 AWG : 2.0A/pin 30 AWG : 1.0A/pin 32 AWG : 1.0A/pin Other pos. 1A/pin	Operating Temperature	−35 to+85℃ (Note 1)	Storage Temperature	−10 to+60℃ (Note 2)
		UL	1A/pin				
	Rated Voltage	Specification	150V AC/DC	Operating Humidity Range	20 to 80% (Note 3)	Storage Humidity Range	40 to 70% (Note 2)
		UL	29.9V AC/DC				

Item	Specification	Condition		
1.Insulation Resistance	500MΩ min.	100V DC		
2.Withstanding voltage	No flashover or insulation breakdown.	500V AC/1 minute		
3.Contact Resistance	30mΩ max.	100mA		
4.Vibration	No electrical discontinuity of 1μs or more	Frequency : 10 to 55 Hz, single amplitude of 0.75 mm, 2 hours in each of the 3 directions.		
5.Humidity (Steady state)	Contact resistance : 30mΩ max. Insulation resistance : 500MΩ min.	96 hours at temperature of 40 and humidity of 90% to 95%		
6.Temperature Cycle	Contact resistance : 30mΩ max. Insulation resistance : 500MΩ min.	(-55 : 30 minutes→ 5 to 35 : 10 minutes→ 85 : 30 minutes→ 5 to 35 : 10 minutes) 5 cycles		
7.Durability (Mating/un-mating)	Contact resistance : 30mΩ max.	Tin plating : 30 cycles Gold plating : 50 cycles		
8.Resistance to Soldering heat	No deformation of components affecting performance.	Through Hole	Flow : 250℃ for 10 seconds	Manual soldering: 300℃ for 3seconds
		SMT	Reflow : At the recommended temperature profile	Manual soldering: 300℃ for 3seconds

Note 1 : Includes temperature rise caused by current flow.
Note 2 : The term "storage" refers to products stored for long period of time prior to mounting and use. Operating Temperature Range and Humidity range covers non conducting condition of installed connectors in storage, shipment or during transportation.
Note 3 : Use without condensation on parts.
Note 4 : Information contained in ths catalog represents general requirements for this Series. Contact us for the drawings and specifications for a specific part number shown.

● UL File No. and Recognition No. UL : E52653

■Materials/Finish

Product	Part	Material	Finish	Remarks	RoHS2
Crimping Socket	Insulator	Polyamide	Beige	UL94V-0	Yes
Crimping Contact for Socket	Contact	Phosphor copper	Tin plated or gold plated	———	
Pin Header (Through hole)	Insulator	Polyamide	Beige	UL94V-0	
	Contact	Brass	Tin plated	———	
Pin Header (SMT Single row)	Insulator	Polyamide	Beige	UL94V-0	
	Contact	Brass	Tin plated or gold plated	———	
	Metal Fitting	Phosphor copper	Tin plated	———	
Pin Header (SMT Double row)	Insulator	Polyamide	Beige	UL94V-0	
	Contact	Brass	Tin plated or gold plated	———	
	Metal Fitting	Phosphor copper	Tin plated	———	

■Product Number Structure

Refer to the chart below when determining the product specifications from the product number.
Please select from the product numbers listed in this catalog when placing orders.

●Connector

DF13 - ＊ S - 1.25 C
❶ ❷ ❸ ❹ ❺

❶ Series Name : DF13	❸ Connector Type S : Single row socket P : Single row pin header DS : Double row socket DP : Double row pin header	❺ Connection Form / Contact Style. C : Crimping socket DSA : Straight through hole DS : Right angle through hole V : Straight SMT H : Right angle SMT
❷ Number of Contacts Single row : 2 to 12, 14, 15 Double row : 10, 20, 30, 40	❹ Contact Pitch : 1.25mm	

●Contact

DF13 # - 2630 SCF A
❶ ❷ ❸ ❹

❶ Style Symbol Blank : Standard G : Low insertion / extraction	❸ Packaging Type SCF : Socket Contact/Reel
❷ Applicable Cable Size 2630 : 26 to 30 AWG 3032 : 30 to 32 AWG	❹ Plating Type Blank : Tin plated A : Gold plated

Aug.1.2026 Copyright 2026 HIROSE ELECTRIC CO., LTD. All Rights Reserved.

Aug.1.2026 Copyright 2026 HIROSE ELECTRIC CO., LTD. All Rights Reserved.

■Single Row Socket

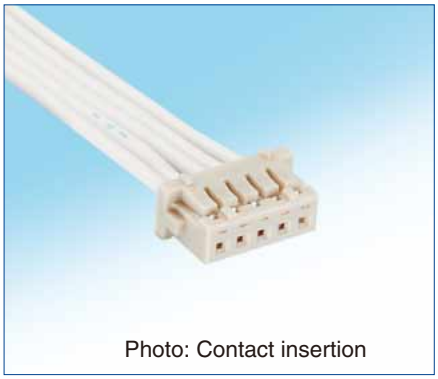

Photo: Contact insertion

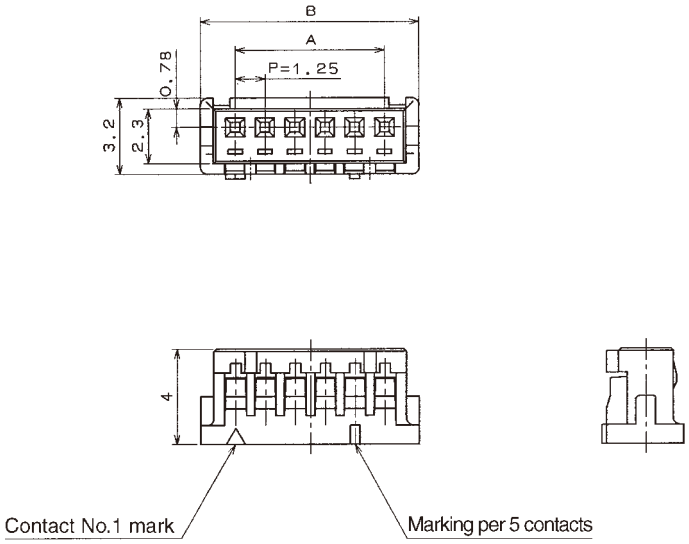

Unit : mm

Part No.	HRS No.	No. of Contacts	A	B
DF13-2S-1.25C	536-0001-4	2	1.25	4.15
DF13-3S-1.25C	536-0002-7	3	2.50	5.40
DF13-4S-1.25C	536-0003-0	4	3.75	6.65
DF13-5S-1.25C	536-0004-2	5	5.00	7.90
DF13-6S-1.25C	536-0005-5	6	6.25	9.15
DF13-7S-1.25C	536-0006-8	7	7.50	10.40
DF13-8S-1.25C	536-0007-0	8	8.75	11.65

Part No.	HRS No.	No. of Contacts	A	B
DF13- 9S-1.25C	536-0008-3	9	10.00	12.90
DF13-10S-1.25C	536-0009-6	10	11.25	14.15
DF13-11S-1.25C	536-0010-5	11	12.50	15.40
DF13-12S-1.25C	536-0011-8	12	13.75	16.65
DF13-13S-1.25C	536-0012-0	13	15.00	17.90
DF13-14S-1.25C	536-0013-3	14	16.25	19.15
DF13-15S-1.25C	536-0014-6	15	17.50	20.40

Note 1 : The quantity is delivered per bag (100pcs.). If needed, please select and order the products per bag.

■Double Row Socket

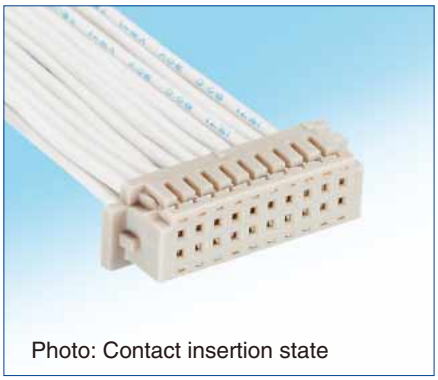

Photo: Contact insertion state

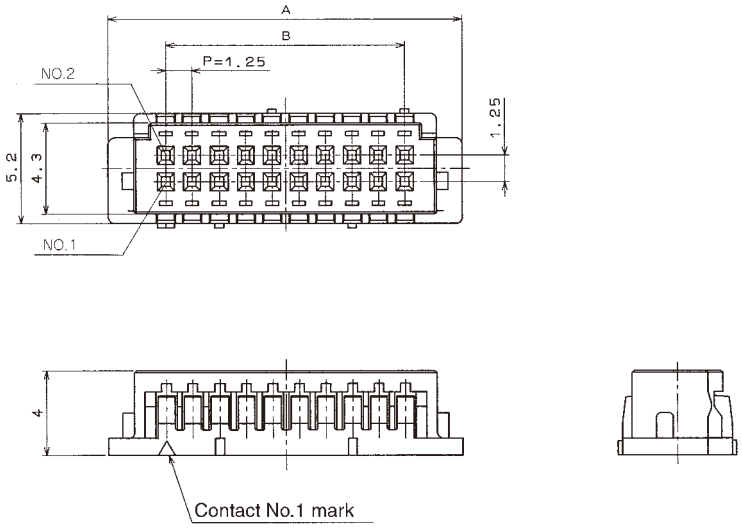

Unit : mm

Part No.	HRS No.	No. of Contacts	A	B
DF13-10DS-1.25C	536-0550-2	10	10.40	5.00
DF13-20DS-1.25C	536-0555-6	20	16.65	11.25
DF13-30DS-1.25C(10)	536-0560-6 10	30	22.90	17.50
DF13-40DS-1.25C(10)	536-0565-0 10	40	29.15	23.75

Note : The quantity is delivered per bag (100pcs). If needed, please select and order the products per bag.

■Single Row Straight Pin Header (Through hole)

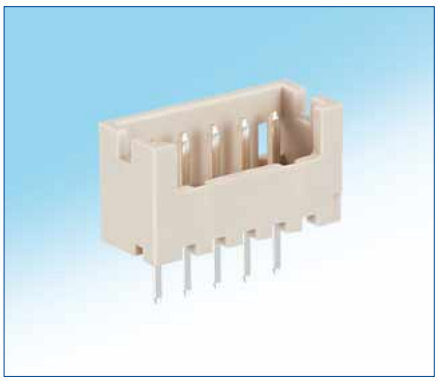

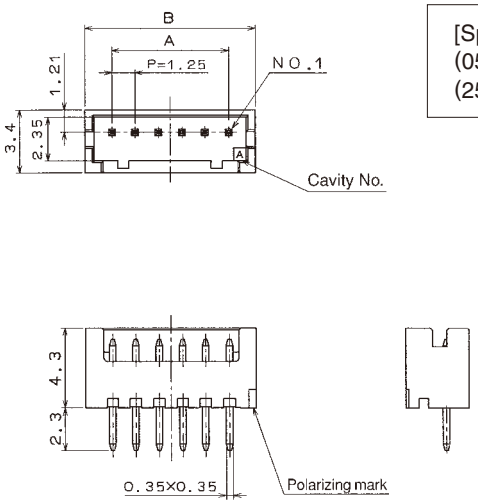

[Specific No.]
(05) : Tin plated
(25) : Tin plated, tube packaging

◆Tube Dimensions

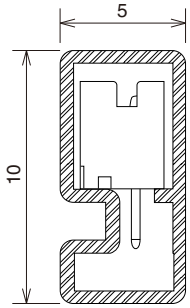

●Board Through-hole Diameter : ϕ0.6±0.03

Unit: mm

Part No.	HRS No.	No. of Contacts	A	B	Tube Packaging Quantity
DF13-2P-1.25DSA(**)	536-0101-9 **	2	1.25	4.15	115
DF13-3P-1.25DSA(**)	536-0102-1 **	3	2.50	5.40	89
DF13-4P-1.25DSA(**)	536-0103-4 **	4	3.75	6.65	72
DF13-5P-1.25DSA(**)	536-0104-7 **	5	5.00	7.90	61
DF13-6P-1.25DSA(**)	536-0105-0 **	6	6.25	9.15	52
DF13-7P-1.25DSA(**)	536-0106-2 **	7	7.50	10.40	46
DF13-8P-1.25DSA(**)	536-0107-5 **	8	8.75	11.65	41

Part No.	HRS No.	No. of Contacts	A	B	Tube Packaging Quantity
DF13- 9P-1.25DSA(**)	536-0108-8 **	9	10.00	12.90	37
DF13-10P-1.25DSA(**)	536-0109-0 **	10	11.25	14.15	34
DF13-11P-1.25DSA(**)	536-0110-0 **	11	12.50	15.40	31
DF13-12P-1.25DSA(**)	536-0111-2 **	12	13.75	16.65	29
DF13-13P-1.25DSA(**)	536-0112-5 **	13	15.00	17.90	27
DF13-14P-1.25DSA(**)	536-0113-8 **	14	16.25	19.15	25
DF13-15P-1.25DSA(**)	536-0114-0 **	15	17.50	20.40	23

Note 1 : The quantity at the specific No."05" is delivered per bag (100pcs.). If needed, please select and order the products per bag.
Note 2 : Order the tube packaging product, multiplying the tube packaging quantity.

■Single Row Right Angle Pin Header (Through hole)

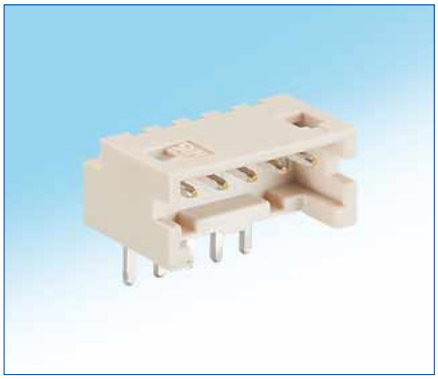

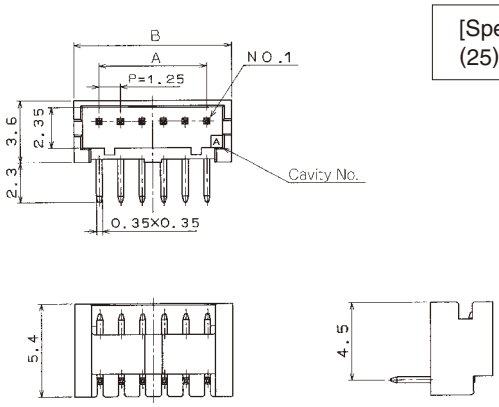

[Specific No.] (**), **
(25) : Tin plated tube packaging

◆Tube Dimensions

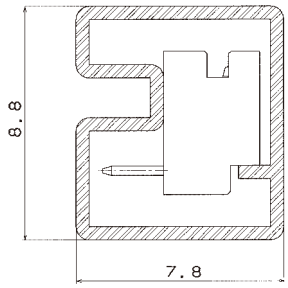

●Board Through-hole Diameter : ϕ0.6±0.03

Unit : mm

Part No.	HRS No.	No. of Contacts	A	B	Tube Packaging Quantity
DF13-2P-1.25DS(25)	536-0151-7 25	2	1.25	4.15	115
DF13-3P-1.25DS(25)	536-0152-0 25	3	2.50	5.40	89
DF13-4P-1.25DS(25)	536-0153-2 25	4	3.75	6.65	72
DF13-5P-1.25DS(25)	536-0154-5 25	5	5.00	7.90	61
DF13-6P-1.25DS(25)	536-0155-8 25	6	6.25	9.15	52
DF13-7P-1.25DS(25)	536-0156-0 25	7	7.50	10.40	46
DF13-8P-1.25DS(25)	536-0157-3 25	8	8.75	11.65	41

Part No.	HRS No.	No. of Contacts	A	B	Tube Packaging Quantity
DF13- 9P-1.25DS(25)	536-0158-6 25	9	10.00	12.90	37
DF13-10P-1.25DS(25)	536-0159-9 25	10	11.25	14.15	34
DF13-11P-1.25DS(25)	536-0160-8 25	11	12.50	15.40	31
DF13-12P-1.25DS(25)	536-0161-0 25	12	13.75	16.65	29
DF13-14P-1.25DS(25)	536-0163-6 25	14	16.25	19.15	25
DF13-15P-1.25DS(25)	536-0164-9 25	15	17.50	20.40	23

Note 1 : Order the tube packaging product, multiplying the tube packaging quantity.

Aug.1.2026 Copyright 2026 HIROSE ELECTRIC CO., LTD. All Rights Reserved.

■Single Row Straight Pin Header (SMT)
(Three-Wall/Correspond to Vacuum Absorption)

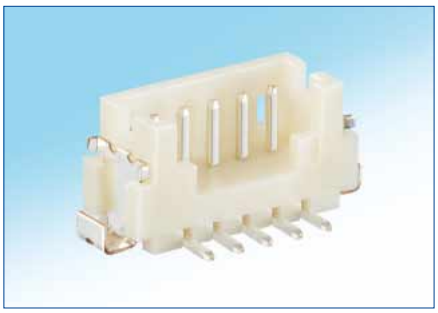

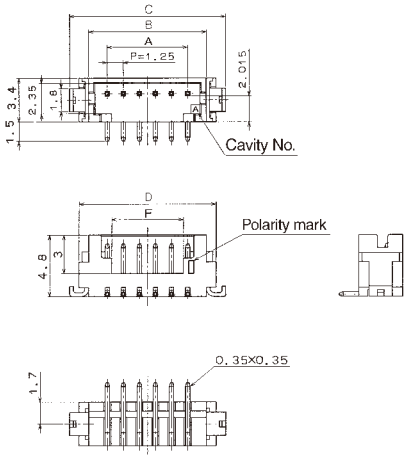

◆PCB mounting pattern

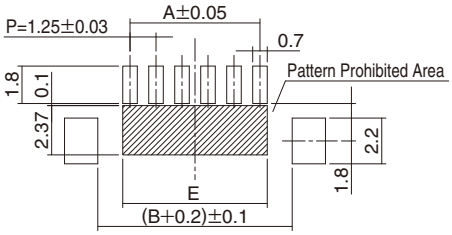

Note 1.Shaded area must be free of any electrically conductive traces to avoid contact with soldered pin header terminations.

This pin header is a three-wall type, header has sufficiently large flat areas to allow pick-up with vacuum nozzles of automatic placement equipment.

[Specific No.] (**), **
(21) : Tin plated embossed tape packaging
(51) : Gold plated embossed tape packaging

Unit : mm

Part No.	HRS No.	No. of Contacts	A	B	C	D	E	F	Emboss Width
DF13C- 2P-1.25V(**)	536-0401-2 **	2	1.25	4.15	7.15	5.65	1.95	2.20	16
DF13C- 3P-1.25V(**)	536-0402-5 **	3	2.50	5.40	8.40	6.90	3.20	3.45	16
DF13C- 4P-1.25V(**)	536-0403-8 **	4	3.75	6.65	9.65	8.15	4.45	3.10	24
DF13C- 5P-1.25V(**)	536-0404-0 **	5	5.00	7.90	10.90	9.40	5.70	4.35	24
DF13C- 6P-1.25V(**)	536-0405-3 **	6	6.25	9.15	12.15	10.65	6.95	5.60	24
DF13C- 7P-1.25V(**)	536-0406-6 **	7	7.50	10.40	13.40	11.90	8.20	6.85	24
DF13C- 8P-1.25V(**)	536-0407-9 **	8	8.75	11.65	14.65	13.15	9.45	8.10	24
DF13C- 9P-1.25V(**)	536-0408-1 **	9	10.00	12.90	15.90	14.40	10.70	9.35	24
DF13C-10P-1.25V(**)	536-0409-4 **	10	11.25	14.15	17.15	15.65	11.95	10.60	24
DF13C-11P-1.25V(**)	536-0410-3 **	11	12.50	15.40	18.40	16.90	13.20	11.85	32
DF13C-12P-1.25V(**)	536-0411-6 **	12	13.75	16.65	19.65	18.15	14.45	13.10	32
DF13C-14P-1.25V(**)	536-0413-1 **	14	16.25	19.15	22.15	20.65	16.95	15.60	32
DF13C-15P-1.25V(**)	536-0414-4 **	15	17.50	20.40	23.40	21.90	18.20	16.85	44

Note 1 : Please order the embossed tape packaging product according to reel number. (1000pcs/reel)

Aug.1.2026 Copyright 2026 HIROSE ELECTRIC CO., LTD. All Rights Reserved.

■Single Row Right Angle Pin Header (SMT) (Four-Wall/Correspond to Vacuum Absorption)

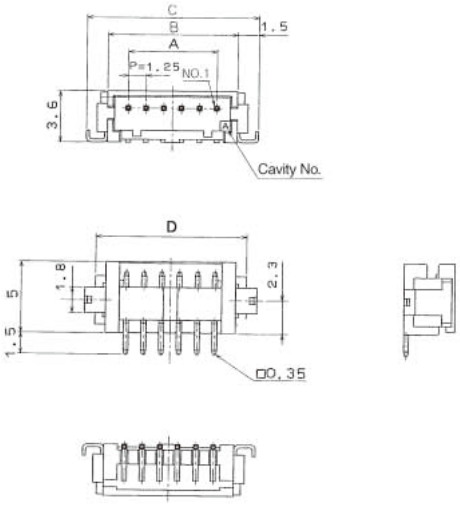

◆PCB mounting pattern

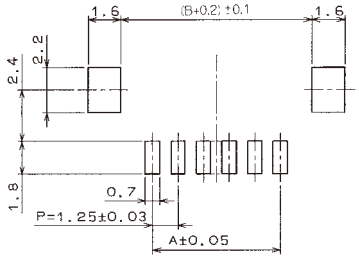

[Specific No.] (**), **
(21) : Tin plated embossed tape packaging
(51) : Gold plated embossed tape packaging

Unit : mm

Part No.	HRS No.	No. of Contacts	A	B	C	D	Emboss Width
DF13A- 2P-1.25H(**)	536-0301-8 **	2	1.25	4.15	7.15	5.65	16
DF13A- 3P-1.25H(**)	536-0302-0 **	3	2.50	5.40	8.40	6.90	16
DF13A- 4P-1.25H(**)	536-0303-3 **	4	3.75	6.65	9.65	8.15	24
DF13A- 5P-1.25H(**)	536-0304-6 **	5	5.00	7.90	10.90	9.40	24
DF13A- 6P-1.25H(**)	536-0305-9 **	6	6.25	9.15	12.15	10.65	24
DF13A- 7P-1.25H(**)	536-0306-1 **	7	7.50	10.40	13.40	11.90	24
DF13A- 8P-1.25H(**)	536-0307-4 **	8	8.75	11.65	14.65	13.15	24
DF13A- 9P-1.25H(**)	536-0308-7 **	9	10.00	12.90	15.90	14.40	24
DF13A-10P-1.25H(**)	536-0309-0 **	10	11.25	14.15	17.15	15.65	24
DF13A-11P-1.25H(**)	536-0310-9 **	11	12.50	15.40	18.40	16.90	32
DF13A-12P-1.25H(**)	536-0311-1 **	12	13.75	16.65	19.65	18.15	32
DF13A-14P-1.25H(**)	536-0313-7 **	14	16.25	19.15	22.15	20.65	32
DF13A-15P-1.25H(**)	536-0314-0 **	15	17.50	20.40	23.40	21.90	44

Note 1 : Please order the embossed tape packaging product according to reel number. (1000pcs/reel)

Aug.1.2026 Copyright 2026 HIROSE ELECTRIC CO., LTD. All Rights Reserved.

■Double Row Straight Pin Header (SMT)
(Four-Wall/Correspond to Vacuum Absorption)

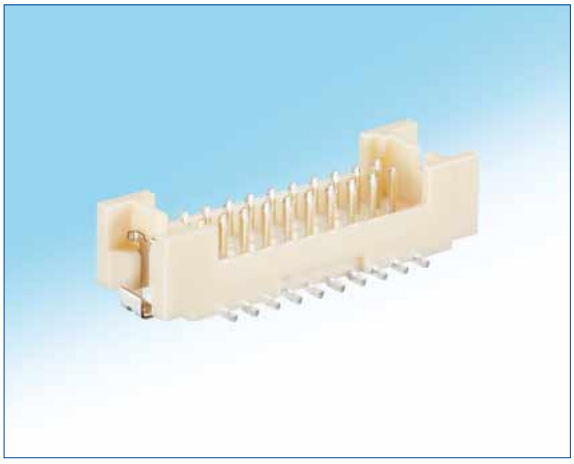

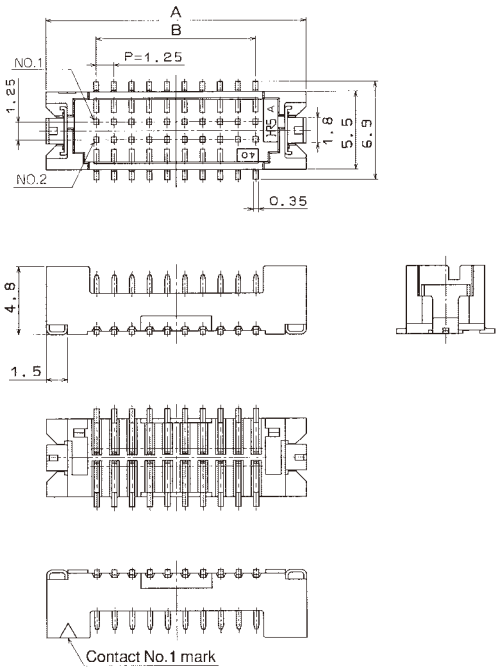

◆PCB mounting pattern

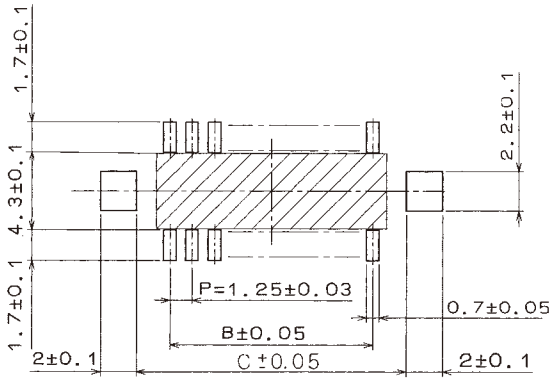

Note 1. Shaded area must be free of any electrically conductive traces to avoid contact with soldered pin header terminations.

[Specific No.] (**), **
(22) : Tin plated embossed tape packaging
(52) : Gold plated embossed tape packaging

Unit : mm

Part No.	HRS No.	No. of Contacts	A	B	C	Spec No. (22)	Spec No. (52)	Emboss Width
DF13EA-10DP-1.25V(**)	536-0570-0	10	12.10	5.00	8.70	✔	✔	24
DF13EA-20DP-1.25V(**)	536-0571-0	20	18.35	11.25	14.95	✔	✔	32
DF13EA-30DP-1.25V(**)	536-0572-0	30	24.60	17.50	21.20	✔	✔	44
DF13EA-40DP-1.25V(**)	536-0573-0	40	30.85	23.75	27.45	–	✔	44

Note 1 : Please order the embossed tape packaging product according to reel number. (1000pcs/reel)
Note 2 : The absorption cap is attached to the embossed tape packaging product.

Aug.1.2026 Copyright 2026 HIROSE ELECTRIC CO., LTD. All Rights Reserved.

■Crimping Contact

●DF13

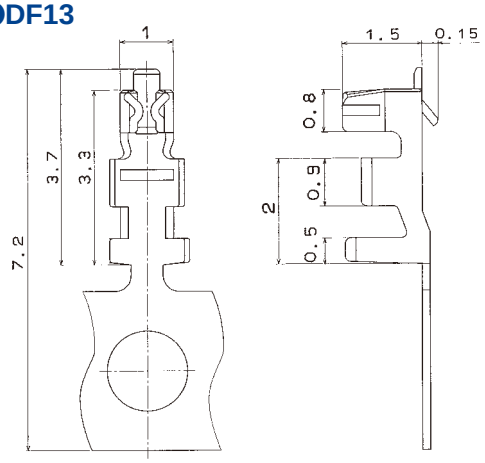

●DF13G

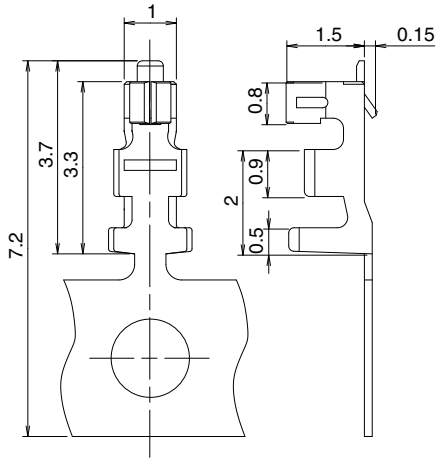

Reel Contact (1Reel, 10,000reel contacts)

Part No.	HRS No.	Finish	Applicable Cable (Tin Plated Annealing Copper Wire) (Note 1)				
			UL	Wire size	Stranded wire conductor	Calcuated coss-section	Jacket Diameter
DF13-2630SCF	536-0300-5	Tin plated	1061 1571	26 AWG	7Pieces / ϕ0.16mm	0.141mm^2	0.56 to 1.0mm
				28 AWG	7Pieces / ϕ0.127mm	0.089mm^2	
				30 AWG	7Pieces / ϕ0.1mm	0.055mm^2	
DF13-3032SCF	536-0299-8		1061 1571	30 AWG	7Pieces / ϕ0.1mm	0.055mm^2	0.52 to 0.8mm
				32 AWG	7Pieces / ϕ0.08mm	0.035mm^2	
DF13-2630SCFA(04)	536-0298-5 04	Au plated	1061 1571	26 AWG	7Pieces / ϕ0.16mm	0.141mm^2	0.56 to 1.0mm
				28 AWG	7Pieces / ϕ0.127mm	0.089mm^2	
				30 AWG	7Pieces / ϕ0.1mm	0.055mm^2	
DF13-3032SCFA	536-0641-6		1061 1571	30 AWG	7Pieces / ϕ0.1mm	0.055mm^2	0.52 to 0.8mm
				32 AWG	7Pieces / ϕ0.08mm	0.035mm^2	
DF13G-2630SCF (Low insertion/extraction)	536-0643-1	Tin plated	1061 1571	26 AWG	7Pieces / ϕ0.16mm	0.141mm^2	0.56 to 1.0mm
				28 AWG	7Pieces / ϕ0.127mm	0.089mm^2	
				30 AWG	7Pieces / ϕ0.1mm	0.055mm^2	
DF13G-2630SCFA (Low insertion/extraction)	536-0642-9	Au plated	1061 1571	26 AWG	7Pieces / ϕ0.16mm	0.141mm^2	0.56 to 1.0mm
				28 AWG	7Pieces / ϕ0.127mm	0.089mm^2	
				30 AWG	7Pieces / ϕ0.1mm	0.055mm^2	

Note 1 : For applicable cable other than those listed above, refer to Crimp Condition Table. Crimp Condition Table is available on product web page. (If you are using a cable that is not listed in Crimp Condition Table, please contact a Hirose sales representative.)

◆Applicable Crimping Tool

Type	Part No.	HRS No.	Applicable Cable (Note 5)	Applicable Contact
Applicator for Hirose Crimping Tool	AP105-DF13-2630S	901-4531-9	UL1571 UL1061	DF13-2630SCF/SCFA (04) DF13G-2630SCF/SCFA
	AP105-DF13-2630S-S	901-4555-7	(Note 4)	
	AP105-DF13-3032S	901-4552-9	UL1571	DF13-3032SCF/SCFA
Applicators Compatible with Other Companies' Crimping Tools (Note 3)	AP109A-DF13-2630S	901-4562-2	UL1571 UL1061	DF13-2630SCF/SCFA (04) DF13G-2630SCF/SCFA
	AP109A-DF13-2630SS	901-4557-2	(Note 4)	
Hirose Crimping Tool	CM-105C	901-0001-0	—	—
Manual Crimping Tool	DF13-TB2630HC	550-0256-1	UL1571	DF13-2630SCF (Note 6)
Extraction Tool	DF-C-PO (B)	550-0179-2	—	DF13-2630SCF/SCFA (04) DF13G-2630SCF/SCFA DF13-3032SCF/SCFA

Note 1 : Please conduct crimping based on the "Crimping Quality Standards (ATAD-H0895-00, ATAD-H0953-00)" and "Crimping Conditions Table".
Note 2 : Problems with tools not specified by Hirose are outside the scope of warranty.
Note 3 : Applicators compatible with other companies' crimping tools (AP109A type applicator) cannot be used with Hirose crimping tool CM-105C. A separate attachment for mounting is needed when using the applicator. Contact the crimping tool maker for inquries on the attachment.
Note 4 : Thin cable applicator type
Note 5 : For applicable cable other than those listed above, refer to Crimp Condition Table. Crimp Condition Table is available on product web page. (If you are using a cable that is not listed in Crimp Condition Table, please contact a Hirose sales representative.)
Note 6 : Cut the reel terminal sequentially with the carrier attached for use with the manual crimping tool. The applicable contacts are limited to those listed in the table.

Aug.1.2026 Copyright 2026 HIROSE ELECTRIC CO., LTD. All Rights Reserved.

◆Crimping

■Items required prior to start crimping

The work-related documents shown below are required before starting the harness connections.
(The ● mark shows the document required.)
When the documents shown below are not available, ask our sales personnel to provide them.

Document Title	Description	Automatic Crimping Machine	Hand Crimping Tool	Remarks
(1) Main unit of crimping machine instruction manual	Explanation of main press machine unit	●	–	When purchasing main press machine unit, it is bundled.
(2) Operating Instructions for Hand Tool	Crimp operation	●	–	When purchasing Applicator, it is bundled.
(3) Applicator Spare Parts Identification	Explanation for Applicator installation	●	–	
(4) Crimp Conditions	Standard values of : Crimp height ; Tensile strength	●	–	
(5) Crimp Quality Standards	Various standards for crimping conditions	●	–	
(6) Operating Instructions for Hand Tool	Inspection items of : Crimp height ; Crimp operation Tensile strength	–	●	When purchasing Hand Tool, it is bundled.

■Tools

When crimping work is applied to our contacts, the tool designated by Hirose should be used.
Crimping work by using tools other than as designated must not be done because it may result in contact failure, disconnection of cable, etc.
*The operating instructions manual is available for the crimping machine and the applicator. Be sure to carefully read the operating instructions manual befor implementing the work.

■Applicable electric wires

For applicable cable other than those listed above, refer to Crimp Condition Table. Crimp Condition Table is available on product web page.
(If you are using a cable that is not listed in Crimp Condition Table, please contact a Hirose sales representative.)

[Precautions]
- Electric wires that are applicable for crimping connectors shall, principally, be the tin-plated stranded soft-copper wire.
- Crimping of electric wires wherein single wires, polyester yarns, etc., exist and crimping of tin-coated wires should be avoided.
- Avoid crimping two electric wires together.
- The setting values of crimp height (Note 1) may vary between tin-plated and gold-plated terminals even if the same electric wires are used.
- The setting values of crimp height (Note 1) may vary depending on the difference in the core wire configuration even if the computed cross-sectional area is the same.

Note 1 : The crimp height is an important item that determines crimping quality. We execute crimping tests for each electric wire to ensure the optimal value for the crimp height with high precision, thereby ensuring optimal setup values.

◆Application Pattern

	SMT (Single Row Product)	Through hole (Single Row Product)	SMT (Double Row Product)
Right Angle	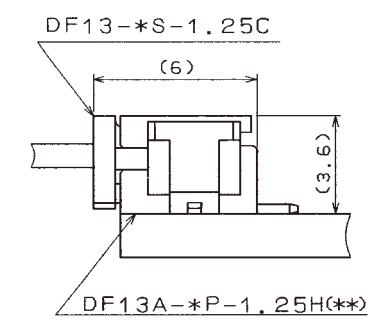	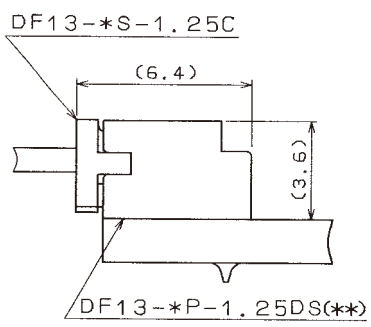	
Straight	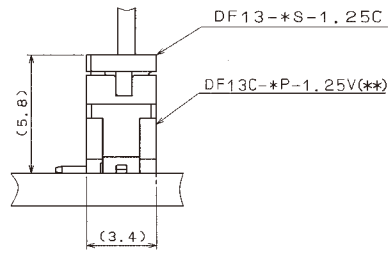	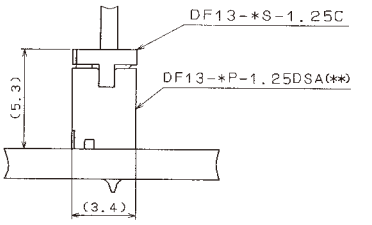	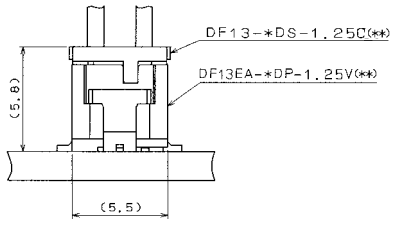

Aug.1.2026 Copyright 2026 HIROSE ELECTRIC CO., LTD. All Rights Reserved.

◆Embossed Carrier Tape Dimensions

●DF13C-∗P-1.25V (∗∗)

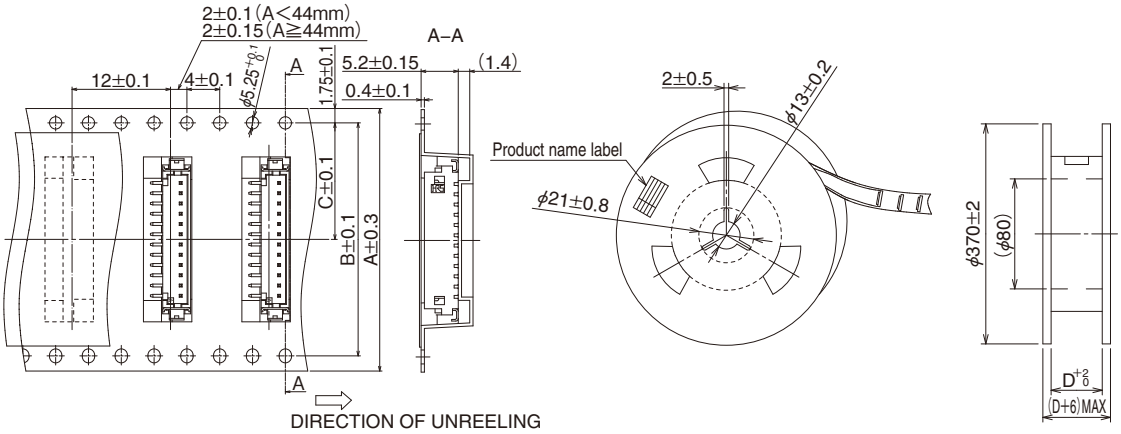

●DF13A-∗P-1.25H (∗∗)

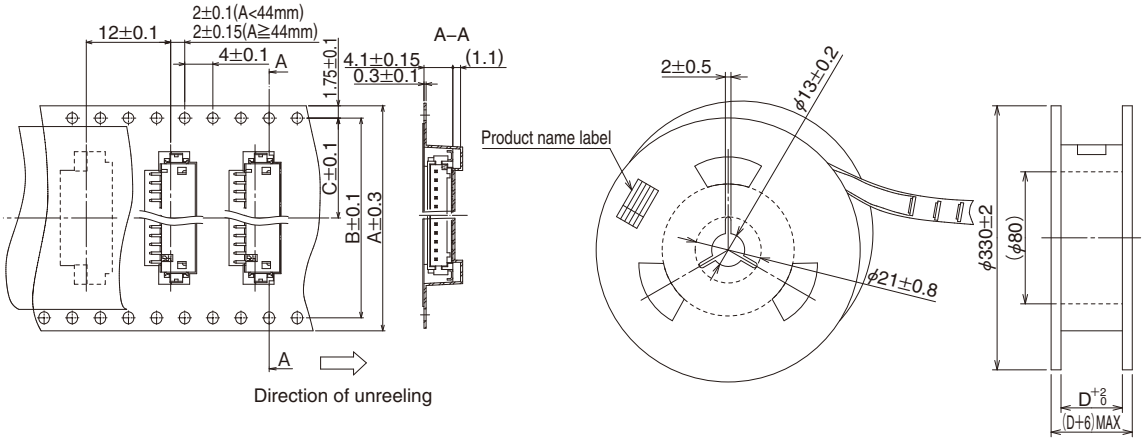

●DF13EA-∗DP-1.25V (∗∗)

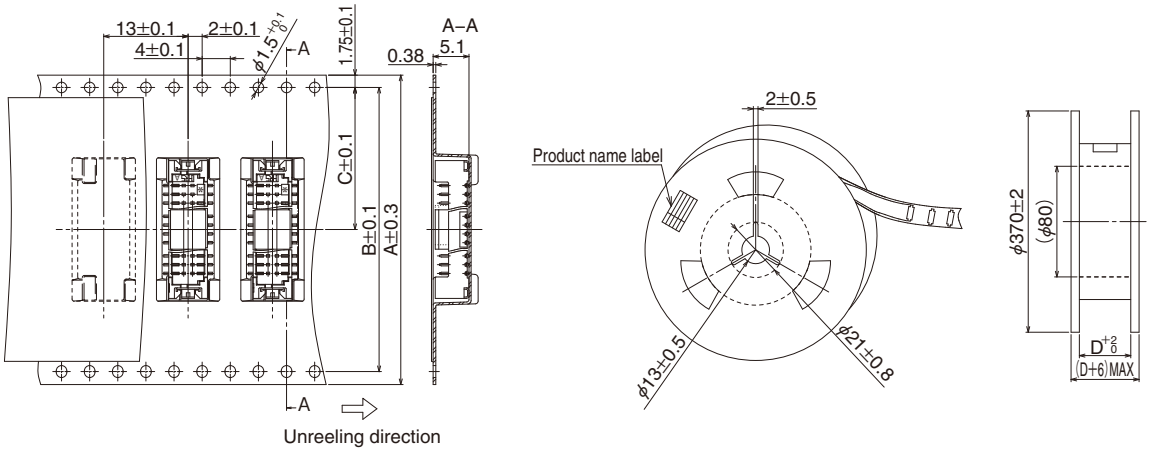

Unit : mm

Product Type ＼ Size	No. of Contacts	A	B	C	D
DF13C-∗P-1.25V (∗∗) DF13A-∗P-1.25H (∗∗)	2, 3	16	———	7.5	16.4
	4 to 10	24	———	11.5	24.4
	11 to 14	32	28.4	14.2	32.4
	15	44	40.4	20.2	44.4

Note : The 13 contacts is not serialized.

Unit : mm

Product Type ＼ Size	No. of Contacts	A	B	C	D
DF13EA-∗DP-1.25V (∗∗)	10	24	———	11.5	24.4
	20	32	28.4	14.2	32.4
	30 to 40	44	40.4	20.2	44.4

Aug.1.2026 Copyright 2026 HIROSE ELECTRIC CO., LTD. All Rights Reserved.

◆Precautions

1. Recommended Temperature Profile (SMT)	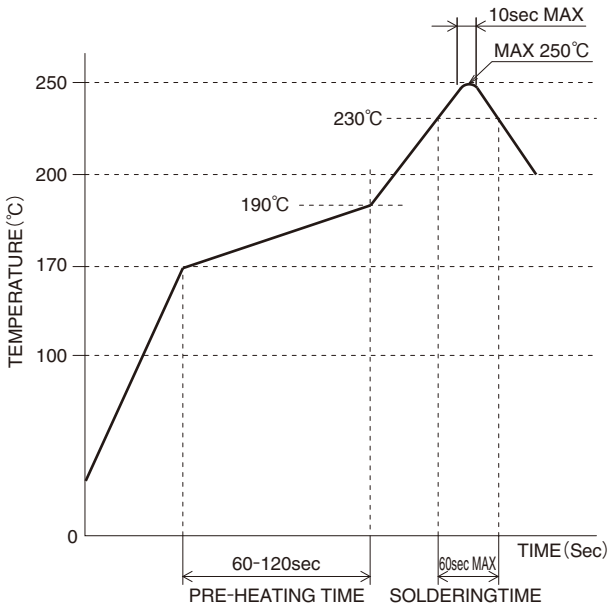 [Applicable Conditions] 1. Peak temperature : 250℃ max. 2. Heating area : 230℃ min. for less than 60 seconds 3. Preheating area : 170℃ to 190℃ for 60 to 120 seconds 4. Number of times : no more than 2 times ＊Measurement is conducted at the contact lead part Soldering results may change depending on conditions such as solder paste type, manufacturer, PCB size, and other soldering materials. Please determine all mounting conditions before use. Note 1 : This temperature profile is a recommended value. Note 2 : Up to 2 cycles of Reflow soldering are possible under the same conditions, provided that there is a return to normal temperature between the first and second cycle. Note 3 : The temperature profile indicates the board surface temperature at the point of contacts with the connector terminals. Note 4 : Slight variations in color of the plastic compounds do not affect form, fit or function of the connector.
2. Recommended Screen Thickness (SMT)	0.15 to 0.2mm
3. Board Warpage (SMT)	Max 0.03mm in the connector center area, based on both connector edges
4. Recommended Manual Soldering Condition	290±10℃ for 2 seconds max.
5. Cleaning Condition	Refer to Wire to board connector Use Hand book. IPA cleaning is allowed. (Cleaning is not recommended because cleaning may change the mating/withdrawal feeling etc. Please contact us when you use other cleaning agents.)
6. Cautions	■Be careful for the excessive scoop insertion/extraction, which will cause damage to the product. ■The color of the plastic molding may differ slightly depending on product lot and future storage conditions but this does not affect the product performance. Black spots may appear on the mold resin but this does not affect the product quality.
7. Precautions	Please refer to following documents in handling this product. ■Crimp quality standards (ETAD-H0895-00, ETAD-H0953-00) ■Wire to board connector Use Hand book.

Aug.1.2026 Copyright 2026 HIROSE ELECTRIC CO., LTD. All Rights Reserved.

◆Precautions

<Precautions at Time of Insertion>

Align with the connector form and press down continue pressing until there is a tactile click.

Handing

Method : Lightly grasping the base the cable, press the connector with your finger and insert it.

Insertion Angle

Caution : Do not insert at an angle of 30° or greater. Doing so will cause contact deformation or case damage.

Method : Insert with the connector parallel.

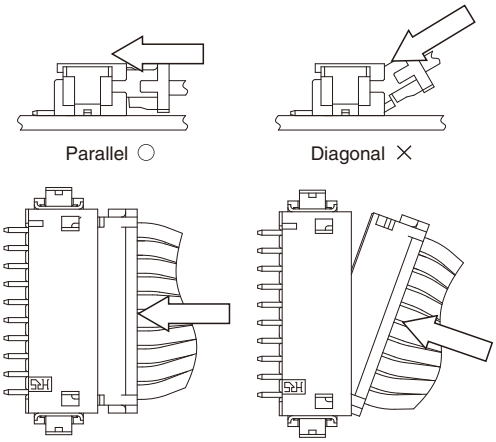

<Precautions at Time of Disconnection>

Align with the connector form and press down continue pressing until there is a tactile click.

Handing

Method : Grasp the cable so that the entire cable is pulled evenly and it out.

Angle of Removal

Caution : Do not remove at an angle of 30° or greater. Doing so will cause contact deformation or case damage.

Method : Remove with the connector parallel.

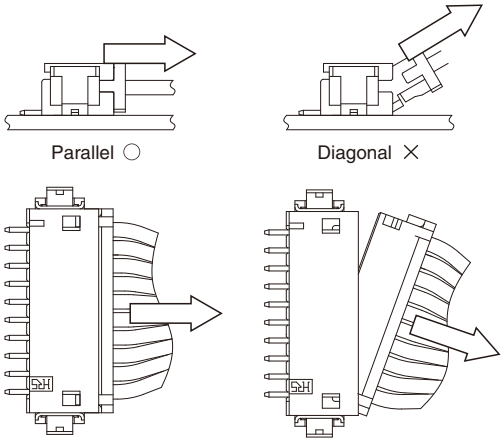

Aug.1.2026 Copyright 2026 HIROSE ELECTRIC CO., LTD. All Rights Reserved.

HIROSE ELECTRIC CO.,LTD.
2-6-3,Nakagawa Chuoh,Tsuzuki-Ku,Yokohama-Shi 224-8540,JAPAN
https://www.hirose.com/

The characteristics and the specifications contained herein are for reference purpose. Please refer to the latest customer drawings prior to use.
The contents of this catalog are current as of date of 01/2025. Contents are subject to change without notice for the purpose of improvements.