CMOS MSI

Quad R−S Latches

MC14043B, MC14044B

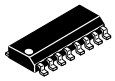

SOIC−16
D SUFFIX
CASE 751B

The MC14043B and MC14044B quad R−S latches are constructed with MOS P−Channel and N−Channel enhancement mode devices in a single monolithic structure. Each latch has an independent Q output and set and reset inputs. The Q outputs are gated through three−state buffers having a common enable input. The outputs are enabled with a logical “1” or high on the enable input; a logical “0” or low disconnects the latch from the Q outputs, resulting in an open circuit at the Q outputs.

Features

- Double Diode Input Protection
- Three−State Outputs with Common Enable
- Outputs Capable of Driving Two Low−power TTL Loads or One Low−Power Schottky TTL Load Over the Rated Temperature Range
- Supply Voltage Range = 3.0 Vdc to 18 Vdc
- NLV Prefix for Automotive and Other Applications Requiring Unique Site and Control Change Requirements; AEC−Q100 Qualified and PPAP Capable
- These Devices are Pb−Free and are RoHS Compliant

MARKING DIAGRAM

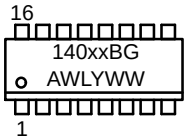

xx	= Specific Device Code
A	= Assembly Location
WL, L	= Wafer Lot
YY, Y	= Year
WW, W	= Work Week
G	= Pb−Free Indicator

ORDERING INFORMATION

See detailed ordering and shipping information on page 5 of this data sheet.

MAXIMUM RATINGS (Voltages Referenced to V_{SS})

Symbol	Parameter	Value	Unit
V_{DD}	DC Supply Voltage Range	−0.5 to +18.0	V
V_{in}, V_{out}	Input or Output Voltage Range (DC or Transient)	−0.5 to V_{DD} + 0.5	V
I_{in}, I_{out}	Input or Output Current (DC or Transient) per Pin	±10	mA
P_D	Power Dissipation, per Package (Note 1)	500	mW
T_A	Ambient Temperature Range	−55 to +125	°C
T_{stg}	Storage Temperature Range	−65 to +150	°C
T_L	Lead Temperature (8−Second Soldering)	260	°C

Stresses exceeding those listed in the Maximum Ratings table may damage the device. If any of these limits are exceeded, device functionality should not be assumed, damage may occur and reliability may be affected.

1. Temperature Derating: “D/DW” Packages: –7.0 mW/°C From 65°C To 125°C

This device contains protection circuitry to guard against damage due to high static voltages or electric fields. However, precautions must be taken to avoid applications of any voltage higher than maximum rated voltages to this high−impedance circuit. For proper operation, V_{in} and V_{out} should be constrained to the range $V_{SS} \le (V_{in}$ or $V_{out}) \le V_{DD}$.

Unused inputs must always be tied to an appropriate logic voltage level (e.g., either V_{SS} or V_{DD}). Unused outputs must be left open.

© Semiconductor Components Industries, LLC, 2014

PIN ASSIGNMENT

NC = NO CONNECTION

Figure 1.

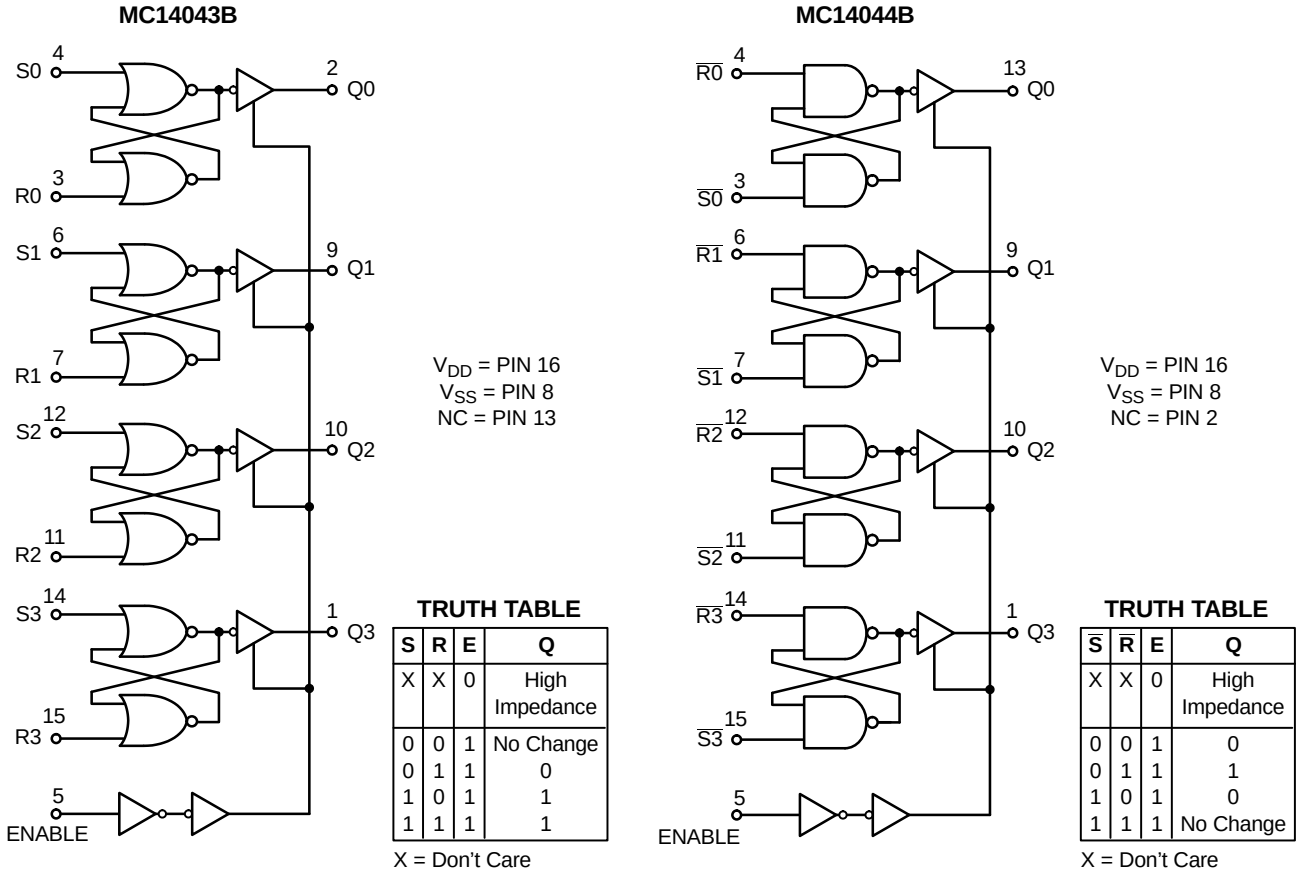

TRUTH TABLE

S	R	E	Q
X	X	0	High Impedance
0	0	1	No Change
0	1	1	0
1	0	1	1
1	1	1	1

X = Don't Care

TRUTH TABLE

$\overline{S}$	$\overline{R}$	E	Q
X	X	0	High Impedance
0	0	1	0
0	1	1	1
1	0	1	0
1	1	1	No Change

X = Don't Care

Figure 2.

ELECTRICAL CHARACTERISTICS (Voltages Referenced to V_{SS})

Characteristic	Symbol	V_{DD} Vdc	−55°C Min	−55°C Max	25°C Min	25°C Typ (Note 2)	25°C Max	125°C Min	125°C Max	Unit
Output Voltage "0" Level $V_{in} = V_{DD}$ or 0	V_{OL}	5.0	–	0.05	–	0	0.05	–	0.05	Vdc
		10	–	0.05	–	0	0.05	–	0.05	
		15	–	0.05	–	0	0.05	–	0.05	
"1" Level $V_{in} = 0$ or V_{DD}	V_{OH}	5.0	4.95	–	4.95	5.0	–	4.95	–	Vdc
		10	9.95	–	9.95	10	–	9.95	–	
		15	14.95	–	14.95	15	–	14.95	–	
Input Voltage "0" Level	V_{IL}									Vdc
(V_O = 4.5 or 0.5 Vdc)		5.0	–	1.5	–	2.25	1.5	–	1.5	
(V_O = 9.0 or 1.0 Vdc)		10	–	3.0	–	4.50	3.0	–	3.0	
(V_O = 13.5 or 1.5 Vdc)		15	–	4.0	–	6.75	4.0	–	4.0	
"1" Level	V_{IH}									Vdc
(V_O = 0.5 or 4.5 Vdc)		5.0	3.5	–	3.5	2.75	–	3.5	–	
(V_O = 1.0 or 9.0 Vdc)		10	7.0	–	7.0	5.50	–	7.0	–	
(V_O = 1.5 or 13.5 Vdc)		15	11	–	11	8.25	–	11	–	
Output Drive Current	I_{OH}									mAdc
(V_{OH} = 2.5 Vdc) Source		5.0	–3.0	–	–2.4	–4.2	–	–1.7	–	
(V_{OH} = 4.6 Vdc)		5.0	–0.64	–	–0.51	–0.88	–	–0.36	–	
(V_{OH} = 9.5 Vdc)		10	–1.6	–	–1.3	–2.25	–	–0.9	–	
(V_{OH} = 13.5 Vdc)		15	–4.2	–	–3.4	–8.8	–	–2.4	–	
(V_{OL} = 0.4 Vdc) Sink	I_{OL}	5.0	0.64	–	0.51	0.88	–	0.36	–	mAdc
(V_{OL} = 0.5 Vdc)		10	1.6	–	1.3	2.25	–	0.9	–	
(V_{OL} = 1.5 Vdc)		15	4.2	–	3.4	8.8	–	2.4	–	
Input Current	I_{in}	15	–	±0.1	–	±0.00001	±0.1	–	±1.0	μAdc
Input Capacitance (V_{in} = 0)	C_{in}	–	–	–	–	5.0	7.5	–	–	pF
Quiescent Current (Per Package)	I_{DD}	5.0	–	1.0	–	0.002	1.0	–	30	μAdc
		10	–	2.0	–	0.004	2.0	–	60	
		15	–	4.0	–	0.006	4.0	–	120	
Total Supply Current (Notes 3 & 4) (Dynamic plus Quiescent, Per Package) (C_L = 50 pF on all outputs all buffers switching)	I_T	5.0	I_T = (0.58 μA/kHz) f + I_{DD}							μAdc
		10	I_T = (1.15 μA/kHz) f + I_{DD}							
		15	I_T = (1.73 μA/kHz) f + I_{DD}							
Three−State Output Leakage Current	I_{TL}	15	–	±0.1	–	±0.0001	±0.1	–	±3.0	μAdc

Product parametric performance is indicated in the Electrical Characteristics for the listed test conditions, unless otherwise noted. Product performance may not be indicated by the Electrical Characteristics if operated under different conditions.

2. Data labelled "Typ" is not to be used for design purposes but is intended as an indication of the IC's potential performance.
3. The formulas given are for the typical characteristics only at 25°C.
4. To calculate total supply current at loads other than 50 pF:

$$I_T(C_L) = I_T(50\ pF) + (C_L - 50)\ Vfk$$

where: I_T is in μA (per package), C_L in pF, $V = (V_{DD} - V_{SS})$ in volts, f in kHz is input frequency, and k = 0.004.

SWITCHING CHARACTERISTICS (Note 5) (C_L = 50 pF, T_A = 25°C)

Characteristic	Symbol	V_{DD} Vdc	Min	Typ (Note 6)	Max	Unit
Output Rise Time	t_{TLH}					ns
t_{TLH} = (1.35 ns/pF) C_L + 32.5 ns		5.0	–	100	200	
t_{TLH} = (0.60 ns/pF) C_L + 20 ns		10	–	50	100	
t_{TLH} = (0.40 ns/pF) C_L + 20 ns		15	–	40	80	
Output Fall Time	t_{THL}					ns
t_{THL} = (1.35 ns/pF) C_L + 32.5 ns		5.0	–	100	200	
t_{THL} = (0.60 ns/pF) C_L + 20 ns		10	–	50	100	
t_{THL} = (0.40 ns/pF) C_L + 20 ns		15	–	40	80	
Propagation Delay Time	t_{PLH}					ns
t_{PLH} = (0.90 ns/pF) C_L + 130 ns		5.0	–	175	350	
t_{PLH} = (0.36 ns/pF) C_L + 57 ns		10	–	75	175	
t_{PLH} = (0.26 ns/pF) C_L + 47 ns		15	–	60	120	
t_{PHL} = (0.90 ns/pF) C_L + 130 ns	t_{PHL}	5.0	–	175	350	ns
t_{PHL} = (0.90 ns/pF) C_L + 57 ns		10	–	75	175	
t_{PHL} = (0.26 ns/pF) C_L + 47 ns		15	–	60	120	
Set, $\overline{\text{Set}}$ Pulse Width	t_W	5.0	200	80	–	ns
		10	100	40	–	
		15	70	30	–	
Reset, $\overline{\text{Reset}}$ Pulse Width	t_W	5.0	200	80	–	ns
		10	100	40	–	
		15	70	30	–	
Three−State Enable/Disable Delay	t_{PLZ}, t_{PHZ}, t_{PZL}, t_{PZH}	5.0	–	150	300	ns
		10	–	80	160	
		15	–	55	110	

5. The formulas given are for the typical characteristics only at 25°C.
6. Data labelled “Typ” is not to be used for design purposes but is intended as an indication of the IC’s potential performance.

AC WAVEFORMS

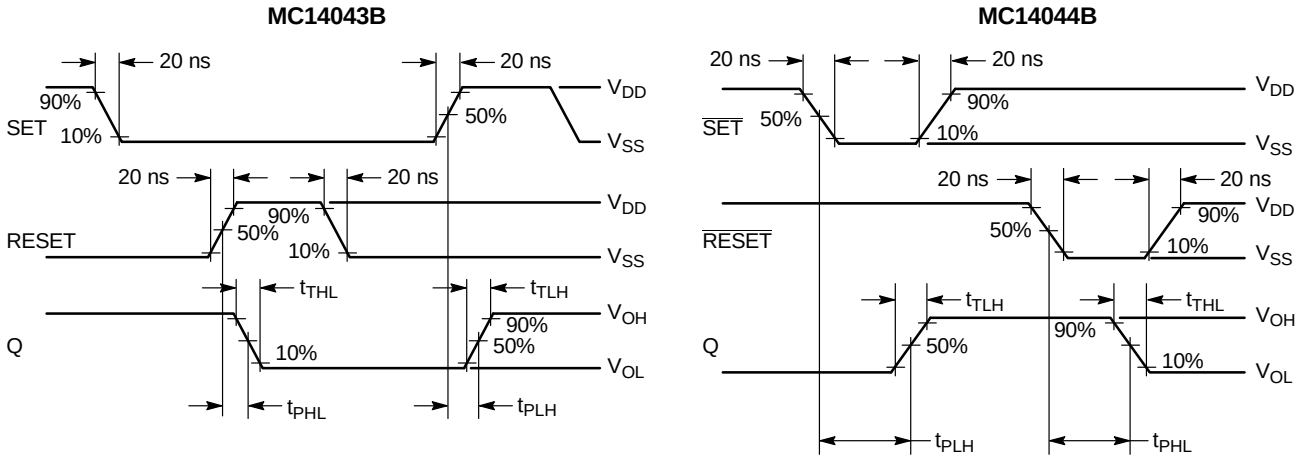

Figure 3.

THREE−STATE ENABLE/DISABLE DELAYS

Set, Reset, Enable, and Switch Conditions for 3−State Tests

Test	Enable	S1	S2	Q	MC14043B S	MC14043B R	MC14044B $\overline{S}$	MC14044B $\overline{R}$
t_{PZH}	↗	Open	Closed	A	V_{DD}	V_{SS}	V_{SS}	V_{DD}
t_{PZL}	↗	Closed	Open	B	V_{SS}	V_{DD}	V_{DD}	V_{SS}
t_{PHZ}	↘	Open	Closed	A	V_{DD}	V_{SS}	V_{SS}	V_{DD}
t_{PLZ}	↘	Closed	Open	B	V_{SS}	V_{DD}	V_{DD}	V_{SS}

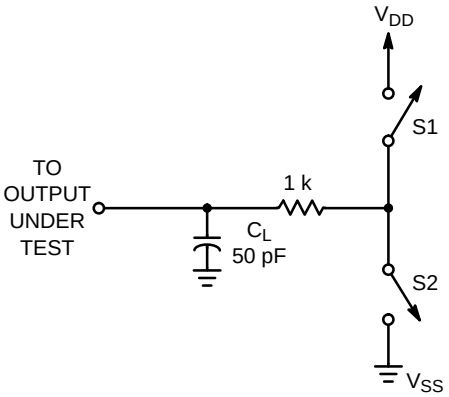

Figure 4.

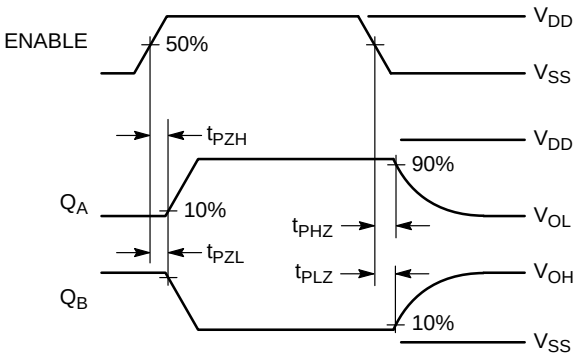

Figure 5.

ORDERING INFORMATION

Device	Package	Shipping†
MC14043BDG	SOIC−16 (Pb−Free)	48 Units / Rail
NLV14043BDG*	SOIC−16 (Pb−Free)	48 Units / Rail
MC14043BDR2G	SOIC−16 (Pb−Free)	2500 Units / Tape & Reel
NLV14043BDR2G*	SOIC−16 (Pb−Free)	2500 Units / Tape & Reel
MC14044BDG	SOIC−16 (Pb−Free)	48 Units / Rail
MC14044BDR2G	SOIC−16 (Pb−Free)	2500 Units / Tape & Reel
NLV14044BDR2G*	SOIC−16 (Pb−Free)	2500 Units / Tape & Reel

†For information on tape and reel specifications, including part orientation and tape sizes, please refer to our Tape and Reel Packaging Specifications Brochure, BRD8011/D.

*NLV Prefix for Automotive and Other Applications Requiring Unique Site and Control Change Requirements; AEC−Q100 Qualified and PPAP Capable.

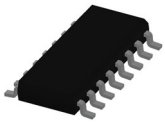

SOIC−16 9.90x3.90x1.37 1.27P
CASE 751B
ISSUE M

DATE 18 OCT 2024

NOTES:
1. DIMENSIONING AND TOLERANCING PER ASME Y14.5M, 2018.
2. DIMENSION IN MILLIMETERS. ANGLE IN DEGREES.
3. DIMENSIONS D AND E1 DO NOT INCLUDE MOLD PROTRUSION.
4. MAXIMUM MOLD PROTRUSION 0.15mm PER SIDE.
5. DIMENSION b DOES NOT INCLUDE DAMBAR PROTRUSION. ALLOWABLE DAMBAR PROTRUSION SHALL BE 0.127mm TOTAL IN EXCESS OF THE b DIMENSION AT MAXIMUM MATERIAL CONDITION.

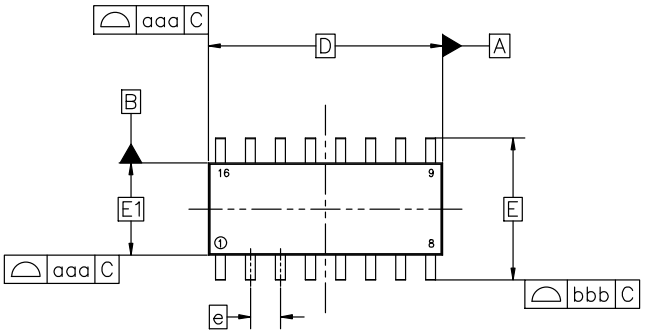

TOP VIEW

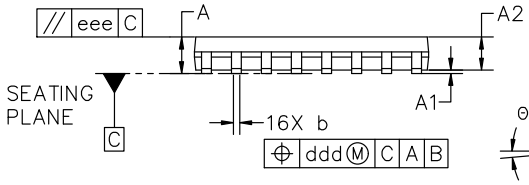

SIDE VIEW

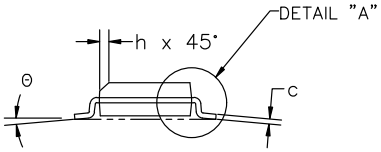

END VIEW

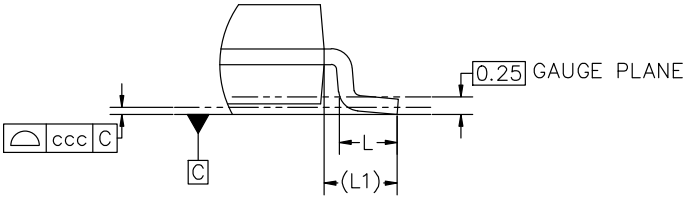

DETAIL "A"
Scale 3:1

MILLIMETERS			
DIM	MIN	NOM	MAX
A	1.35	1.55	1.75
A1	0.10	0.18	0.25
A2	1.25	1.37	1.50
b	0.35	0.42	0.49
c	0.19	0.22	0.25
D	9.90 BSC		
E	6.00 BSC		
E1	3.90 BSC		
e	1.27 BSC		
h	0.25	---	0.50
L	0.40	0.83	1.25
L1	1.05 REF		
Θ	0°	---	7°
TOLERANCE OF FORM AND POSITION			
aaa	0.10		
bbb	0.20		
ccc	0.10		
ddd	0.25		
eee	0.10		

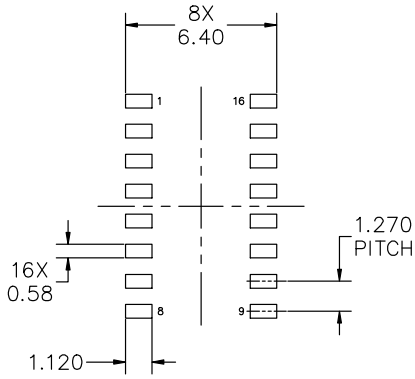

RECOMMENDED MOUNTING FOOTPRINT

*FOR ADDITIONAL INFORMATION ON OUR PB−FREE STRATEGY AND SOLDERING DETAILS, PLEASE DOWNLOAD THE onsemi SOLDERING AND MOUNTING TECHNIQUES REFERENCE MANUAL, SOLDERRM/D

DOCUMENT NUMBER:	98ASB42566B	Electronic versions are uncontrolled except when accessed directly from the Document Repository. Printed versions are uncontrolled except when stamped "CONTROLLED COPY" in red.
DESCRIPTION:	SOIC−16 9.90X3.90X1.37 1.27P	PAGE 1 OF 2

onsemi and onsemi are trademarks of Semiconductor Components Industries, LLC dba **onsemi** or its subsidiaries in the United States and/or other countries. **onsemi** reserves the right to make changes without further notice to any products herein. **onsemi** makes no warranty, representation or guarantee regarding the suitability of its products for any particular purpose, nor does **onsemi** assume any liability arising out of the application or use of any product or circuit, and specifically disclaims any and all liability, including without limitation special, consequential or incidental damages. **onsemi** does not convey any license under its patent rights nor the rights of others.

SOIC−16 9.90x3.90x1.37 1.27P
CASE 751B
ISSUE M

DATE 18 OCT 2024

GENERIC MARKING DIAGRAM*

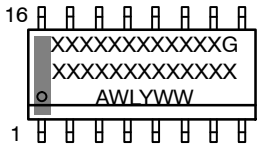

XXXXX = Specific Device Code
A = Assembly Location
WL = Wafer Lot
Y = Year
WW = Work Week
G = Pb−Free Package

*This information is generic. Please refer to device data sheet for actual part marking. Pb−Free indicator, “G” or microdot “▪”, may or may not be present. Some products may not follow the Generic Marking.

STYLE 1:

PIN 1.	COLLECTOR
2.	BASE
3.	EMITTER
4.	NO CONNECTION
5.	EMITTER
6.	BASE
7.	COLLECTOR
8.	COLLECTOR
9.	BASE
10.	EMITTER
11.	NO CONNECTION
12.	EMITTER
13.	BASE
14.	COLLECTOR
15.	EMITTER
16.	COLLECTOR

STYLE 2:

PIN 1.	CATHODE
2.	ANODE
3.	NO CONNECTION
4.	CATHODE
5.	CATHODE
6.	NO CONNECTION
7.	ANODE
8.	CATHODE
9.	CATHODE
10.	ANODE
11.	NO CONNECTION
12.	CATHODE
13.	CATHODE
14.	NO CONNECTION
15.	ANODE
16.	CATHODE

STYLE 3:

PIN 1.	COLLECTOR, DYE #1
2.	BASE, #1
3.	EMITTER, #1
4.	COLLECTOR, #1
5.	COLLECTOR, #2
6.	BASE, #2
7.	EMITTER, #2
8.	COLLECTOR, #2
9.	COLLECTOR, #3
10.	BASE, #3
11.	EMITTER, #3
12.	COLLECTOR, #3
13.	COLLECTOR, #4
14.	BASE, #4
15.	EMITTER, #4
16.	COLLECTOR, #4

STYLE 4:

PIN 1.	COLLECTOR, DYE #1
2.	COLLECTOR, #1
3.	COLLECTOR, #2
4.	COLLECTOR, #2
5.	COLLECTOR, #3
6.	COLLECTOR, #3
7.	COLLECTOR, #4
8.	COLLECTOR, #4
9.	BASE, #4
10.	EMITTER, #4
11.	BASE, #3
12.	EMITTER, #3
13.	BASE, #2
14.	EMITTER, #2
15.	BASE, #1
16.	EMITTER, #1

STYLE 5:

PIN 1.	DRAIN, DYE #1
2.	DRAIN, #1
3.	DRAIN, #2
4.	DRAIN, #2
5.	DRAIN, #3
6.	DRAIN, #3
7.	DRAIN, #4
8.	DRAIN, #4
9.	GATE, #4
10.	SOURCE, #4
11.	GATE, #3
12.	SOURCE, #3
13.	GATE, #2
14.	SOURCE, #2
15.	GATE, #1
16.	SOURCE, #1

STYLE 6:

PIN 1.	CATHODE
2.	CATHODE
3.	CATHODE
4.	CATHODE
5.	CATHODE
6.	CATHODE
7.	CATHODE
8.	CATHODE
9.	ANODE
10.	ANODE
11.	ANODE
12.	ANODE
13.	ANODE
14.	ANODE
15.	ANODE
16.	ANODE

STYLE 7:

PIN 1.	SOURCE N-CH
2.	COMMON DRAIN (OUTPUT)
3.	COMMON DRAIN (OUTPUT)
4.	GATE P-CH
5.	COMMON DRAIN (OUTPUT)
6.	COMMON DRAIN (OUTPUT)
7.	COMMON DRAIN (OUTPUT)
8.	SOURCE P-CH
9.	SOURCE P-CH
10.	COMMON DRAIN (OUTPUT)
11.	COMMON DRAIN (OUTPUT)
12.	COMMON DRAIN (OUTPUT)
13.	GATE N-CH
14.	COMMON DRAIN (OUTPUT)
15.	COMMON DRAIN (OUTPUT)
16.	SOURCE N-CH

onsemi and onsemi are trademarks of Semiconductor Components Industries, LLC dba **onsemi** or its subsidiaries in the United States and/or other countries. **onsemi** reserves the right to make changes without further notice to any products herein. **onsemi** makes no warranty, representation or guarantee regarding the suitability of its products for any particular purpose, nor does **onsemi** assume any liability arising out of the application or use of any product or circuit, and specifically disclaims any and all liability, including without limitation special, consequential or incidental damages. **onsemi** does not convey any license under its patent rights nor the rights of others.

© Semiconductor Components Industries, LLC, 2019

onsemi, onsemi, and other names, marks, and brands are registered and/or common law trademarks of Semiconductor Components Industries, LLC dba "**onsemi**" or its affiliates and/or subsidiaries in the United States and/or other countries. **onsemi** owns the rights to a number of patents, trademarks, copyrights, trade secrets, and other intellectual property. A listing of **onsemi**'s product/patent coverage may be accessed at www.onsemi.com/site/pdf/Patent−Marking.pdf. **onsemi** reserves the right to make changes at any time to any products or information herein, without notice. The information herein is provided "as−is" and **onsemi** makes no warranty, representation or guarantee regarding the accuracy of the information, product features, availability, functionality, or suitability of its products for any particular purpose, nor does **onsemi** assume any liability arising out of the application or use of any product or circuit, and specifically disclaims any and all liability, including without limitation special, consequential or incidental damages. Buyer is responsible for its products and applications using **onsemi** products, including compliance with all laws, regulations and safety requirements or standards, regardless of any support or applications information provided by **onsemi**. "Typical" parameters which may be provided in **onsemi** data sheets and/or specifications can and do vary in different applications and actual performance may vary over time. All operating parameters, including "Typicals" must be validated for each customer application by customer's technical experts. **onsemi** does not convey any license under any of its intellectual property rights nor the rights of others. **onsemi** products are not designed, intended, or authorized for use as a critical component in life support systems or any FDA Class 3 medical devices or medical devices with a same or similar classification in a foreign jurisdiction or any devices intended for implantation in the human body. Should Buyer purchase or use **onsemi** products for any such unintended or unauthorized application, Buyer shall indemnify and hold **onsemi** and its officers, employees, subsidiaries, affiliates, and distributors harmless against all claims, costs, damages, and expenses, and reasonable attorney fees arising out of, directly or indirectly, any claim of personal injury or death associated with such unintended or unauthorized use, even if such claim alleges that **onsemi** was negligent regarding the design or manufacture of the part. **onsemi** is an Equal Opportunity/Affirmative Action Employer. This literature is subject to all applicable copyright laws and is not for resale in any manner.

ADDITIONAL INFORMATION

TECHNICAL PUBLICATIONS:
Technical Library: www.onsemi.com/design/resources/technical−documentation
onsemi Website: www.onsemi.com

ONLINE SUPPORT: www.onsemi.com/support
For additional information, please contact your local Sales Representative at
www.onsemi.com/support/sales